SIEMENS

Siemens Corporate Technology | 25. September 2014

Flywheels: State of the Art and Recent Technological Advances

Restricted © Siemens AG 2013. All rights reserved

Flywheel for IoE: Project Goals

Main goal

Development and realization of a **flywheel-based** prototype **power-storage** system buffering short time (range of seconds) power peaks.

Use Cases

Power storage with low active operation time (transfer of energy):

- Uninterruptible Power Supply (UPS) bridging a substitute power supply system
- Supply of short-term cyclic power peaks to reduce the required system connection power (peak shaving)

Targets

1. Minimization of standby / idle time losses
2. Use of cost-efficient standard components
3. Modular system for scaling power and energy
4. Minimization of operation and maintenance costs

⇓ **Cost**
⇑ **Efficiency**

Restricted © Siemens AG 2013. All rights reserved

Comparison of energy storage systems

Source: IEC White Paper Electrical Energy Storage (Fraunhofer ISE)

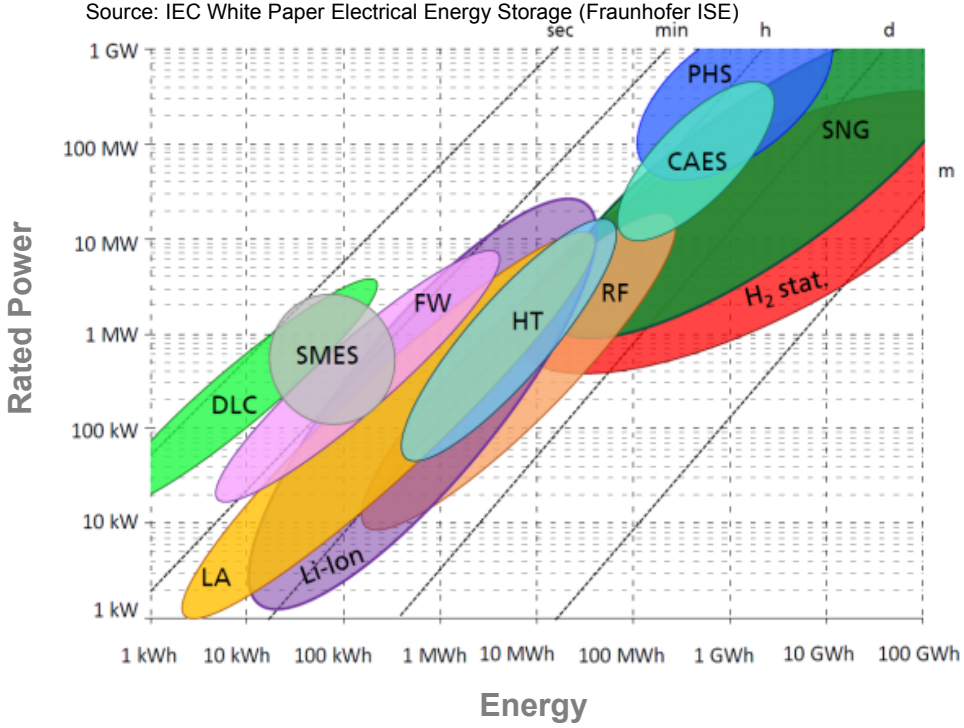

Source: BMWi-Auftragsstudie 08/28 (Fraunhofer ISE, Fraunhofer ATS, VKPartner)

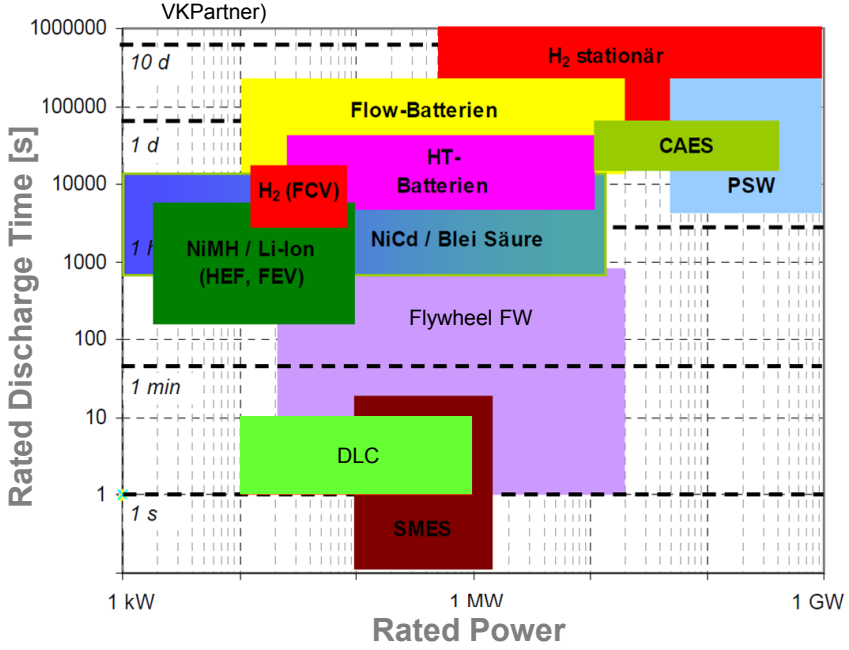

Classification of flywheels:

- Short time and high power storage
- Resistant against harsh temperature environment
- Competitor for supercaps and high power Li-Ion batteries

Restricted © Siemens AG 2013. All rights reserved

Comparison Supercaps vs. Flywheel and improvement potential

SIEMENS

Characteristic	Supercaps	Flywheels
Self discharge	< 10% per day	1 – 20% per hour
Maximum Cycles	~500.000	>1.000.000 (theoretically limitless)
Life time [years]	1 to 10 (6) >30 for Nickel-Supercaps (2)	20 (6) >20 for systems with carbon fiber and vacuum (4)
Costs (in 2009)	10.000 to 70.000 €/kWh (6)(8) ~500 €/kW (8)	5.000 to 7.000 €/kWh (8) 100to360 €/kW (400€/kW) (6)(8)
Efficiency [%]	84 – 95 (6)(9)	85 – 90 (6)
Aging due to high load	High	Nearly not existing (4)
Maintenance	Free	Depending on bearing and drive technology
Influence of Temperature	Low	Nearly not existing

Improvement potential of flywheel systems:

- Reduction of drive losses increasing self discharge during standby operation
- Losses of vacuum integrated drive rotors require either advanced thermal management (e.g. active rotor cooling) or operation in partial vacuum with increased self discharge
- Use of standard components
- Permanent vacuum systems without auxiliary equipment

Restricted © Siemens AG 2013. All rights reserved

Drivetrains of available Flywheel systems: State of Technology

SIEMENS

1. **Permanently excited synchronous machine under full vacuum**

Advantages:

- High power density and high efficiency of drive train

Disadvantages:

- Rotor-losses in combination with vacuum require extensive cooling design
- Idle time losses by induced voltage increase self-discharge and thermal stress
- Vacuum-tight stator design or auxiliary vacuum pump necessary

2. **Permanently excited synchronous machine under partial vacuum**

Advantages:

- High power density and high efficiency of drive train
- Rotor cooling by air/gas

Disadvantages:

- Increased self-discharge by air friction
- Idle time losses by induced voltage increase self-discharge and thermal stress
- Vacuum-tight stator design or auxiliary vacuum pump necessary

Combination of flywheel and rotor of drive train either require an extensive thermal management (systems under full vacuum) or increase the system losses (partial vacuum)

Restricted © Siemens AG 2013. All rights reserved

Flywheel concept with contactless Reluctance Clutch

+

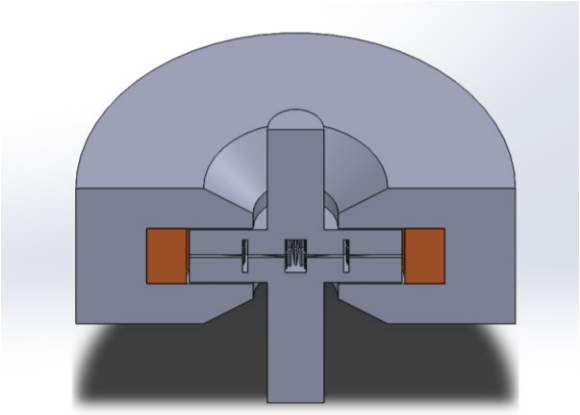

+

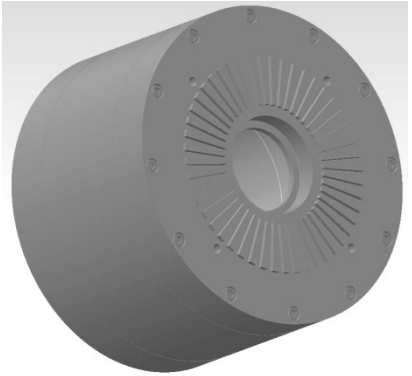

Drivetrain
Cost-efficient available standard drive components (e.g. e-mobility drivetrain)

Clutch
Switchable contactless reluctance clutch for torque transmission between drive and flywheel

Flywheel
Complete magnetically beared steel-flywheel under full vacuum

→ Cost efficient standard drive components
→ Minimization of non-load losses by magnet bearing/full vacuum **and** decoupling of drive train losses
→ Operating strategy: drive train active only during energy transmission

Restricted © Siemens AG 2013. All rights reserved

Achivements Beyond State of the Art: Novel reluctance clutch concept

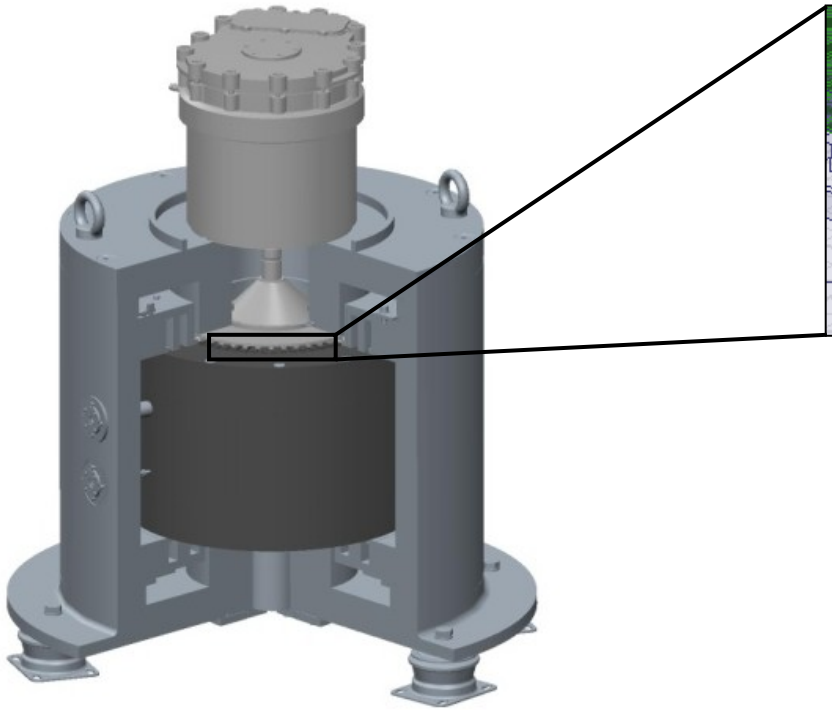

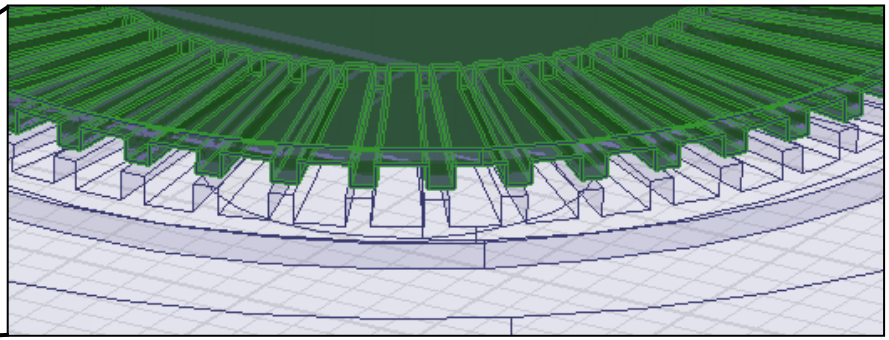

Functional principle

- Flywheel and rotor –assembly (connected to drive) with alternating bulk-trench structure
- System tends to minimize the magnetic resistance (energy) with applied magnetic field
- Torque is transmitted by magnetic reluctance (maximum depending on magnitude of magnetic field)

Design and Specification

- Torque transmission by static, homogeneous magnetic field
  → Reduction of losses (eddy current and remagnetization)
  → Simple power electronics
- Simple vacuum housing (disc) by axial design
- Tmax = 240Nm @ 20A
- Axial force compensation of flywheel

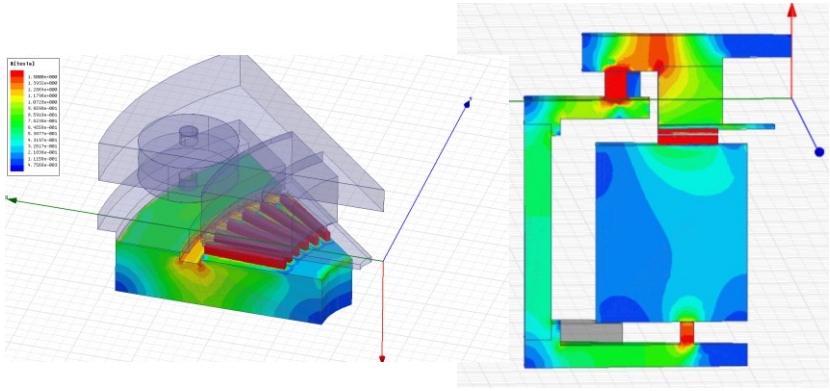

Restricted © Siemens AG 2013. All rights reserved

Realized Flywheel Prototype

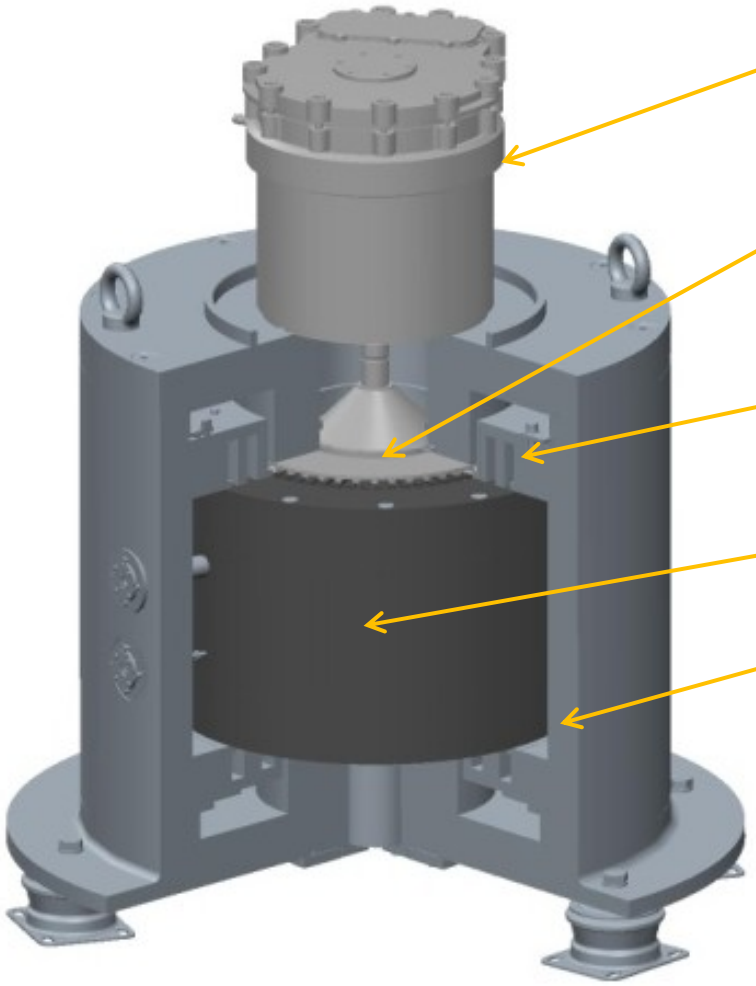

Use of cost optimized, available **standard drives** to reduce system costs

Contact free, switchable **reluctance clutch** to separate drive from flywheel → drive losses do not influence self discharge during standby operation

Maintenance free active **magnetic bearing** to reduce system losses

Steel flywheel in **full vacuum** to reduce standby losses

Bifunctional housing for permanent vacuum operation (no auxiliary equipment) and burst protection

Prototype Design

- 0.5 kWh stored energy
- max.10.000 rpm
- 120 kW system power
- 15s buffering @ 120kW

Restricted © Siemens AG 2013. All rights reserved

Flywheel for IoE: Summary

Scope within IoE-Project:

- **Prototypical realization** of a **flywheel based** energy storage system acting as uninterruptible power supply (UPS) in the Internet of Energy building demonstrator
- System concept based on **standard cost-efficient drive components** combined with **novel reluctance-clutch** and a magnetically mounted flywheel in full vacuum to reduce costs and non-load-losses
- **R&D** on integrated reluctance-clutch and magnetic bearing system

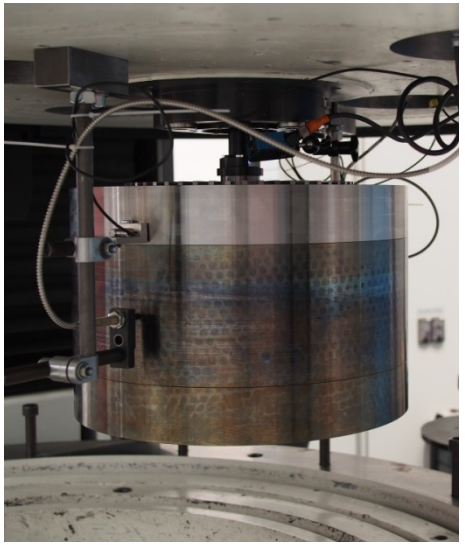

Results

- Prototype system with all functional subsystems built up and basic functionality tested
- Reluctance clutch:
  - Development of design to fulfill requirements
  - Complete specification on test rig
- Flywheel tested at 10.000rpm on test rig
- Development of vacuum housing design
- Development of burst protection and safety concept

Exploitation:

- Generic reluctance clutch principle can be adopted to other drive application (e.g. maintenance free freewheel for PSM machines, process technology (Vacuum, hazardous fluids))
- Potential for UPS system and peak-power compensation component at healthcare and industry applications

Restricted © Siemens AG 2013. All rights reserved

SIEMENS

Thank you very much for your attention!

Restricted © Siemens AG 2013. All rights reserved