Electric Mobility

"eMobility eMotion"

25-26th September 2013, Toulouse, France

With modular integration to a new EV architecture

Mr Aard van Weezel
DuraCar Holding bv, The Netherlands

ARTEMIS

eniac JOINT UNDERTAKING

Presentation Outline

- Introduction DuraCar Organization
- Vision / Mission
- Modular design
- Existing power train architecture
- Body key factors
- Pollux contribution
- HMI display’s
- EV architecture (QUICC) New Generation
- Summary

Introduction

- Organization: DuraCar Holding BV

- DuraCar has developed and build a new distribution vehicle concept based on a electric drivetrain.
- Specialized in developing new vehicle concepts and system integrator of new embedded systems

- 5 employees
- Workshop facilities of AWEFLEX systems
- 2 Quicc DiVa's used as test platform

Vision

- Zero Emissions Equals Zero Guilt.

- Ready for innovative solutions for sustainable mobility.
- These solutions should make a contribution towards four essential aspects:
  - **Environment**
  - **Cost price per km**
  - **Inner-city accessibility**
  - **Human Car Interaction**

Mission

- Creating a production platform for new technologies makes DuraCar the innovator of sustainable mobility.

- DuraCar will introduce a number of fully electrically powered vehicles *QUICC!* (*QUICC!* DiVa is the first of the family)

- The *QUICC!* DiVa model for city distribution combines a number of innovative technologies:

- It is DuraCar's ambition to lead the European market segment of electrically powered, lightweight recyclable vehicles (Cradle to Cradle)

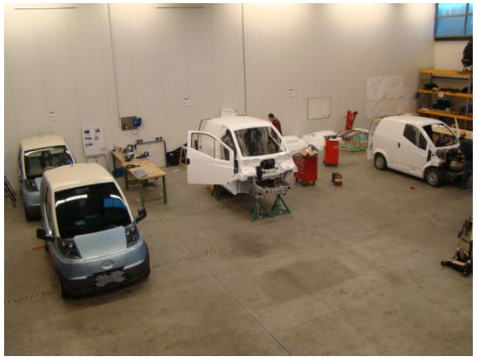

Modular design

- Body
- Power train/ Sub frame
- Interior
- Battery system
- Electric system
- auxiliaries

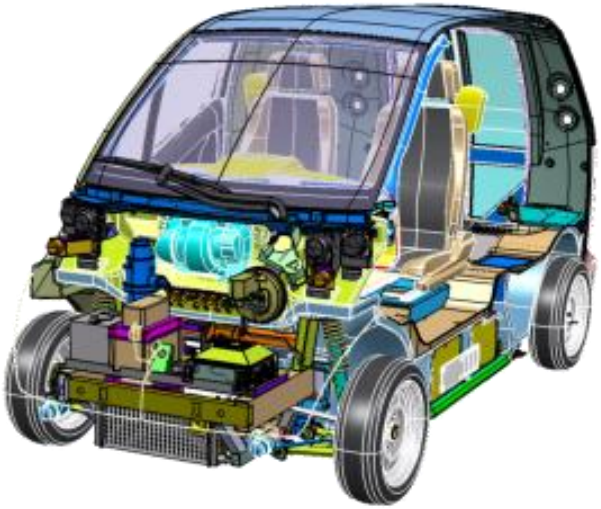

Existing power train architecture

- Central motor (Siemens18kW)
- Exchangeable light weight sub frame
- Front wheel drive
- On board charger (3,3 kW/h)
- Battery 90 Ah / 288 V / 25 kW
- Tim 600 inverter
- Range ca. 130 km / top speed 130km/h

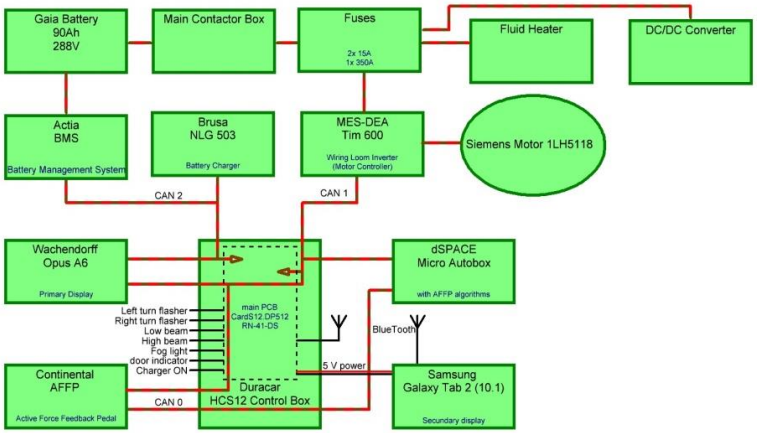

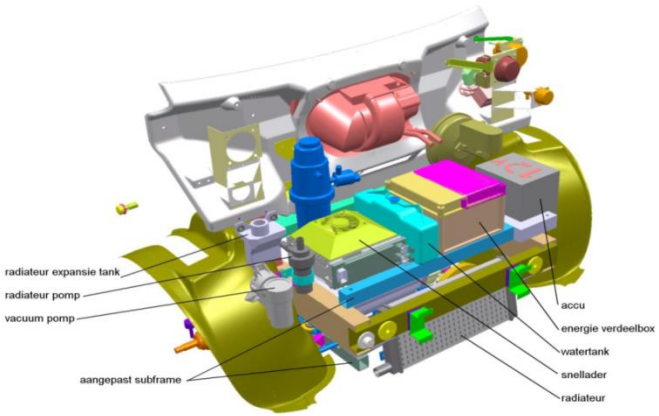

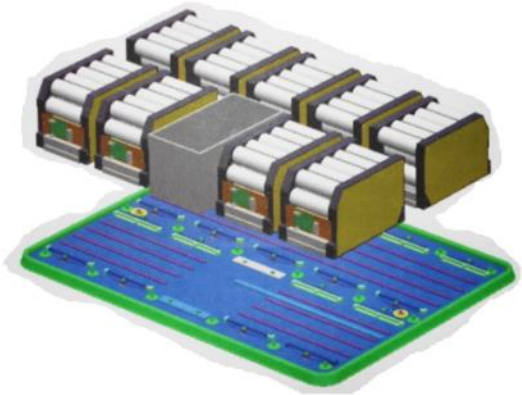

Body key factors

- Currently: glass fiber composite & PU foam
- (near future composite polymer)
- Recyclable C2C
- Completely glued /sealed
- Car coloured material

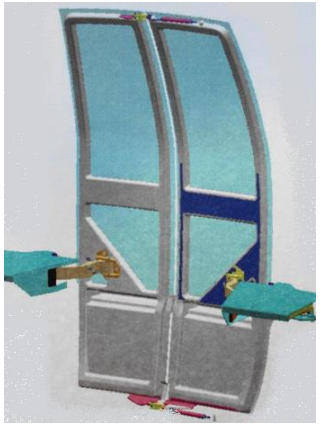

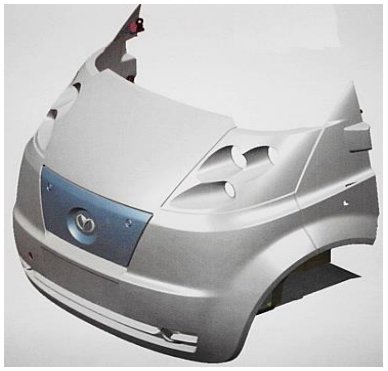

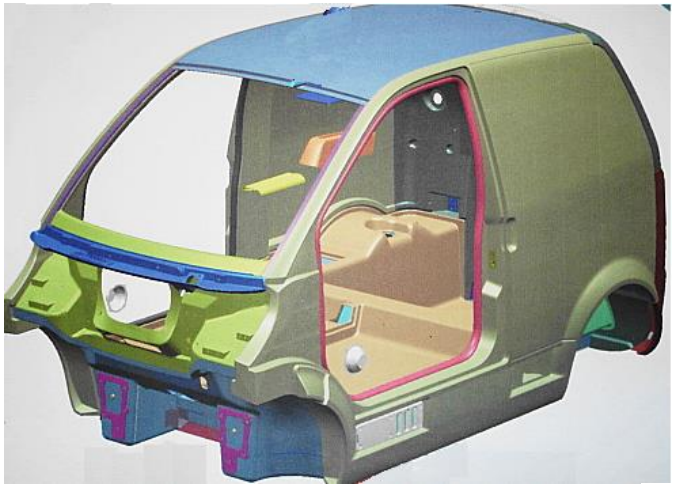

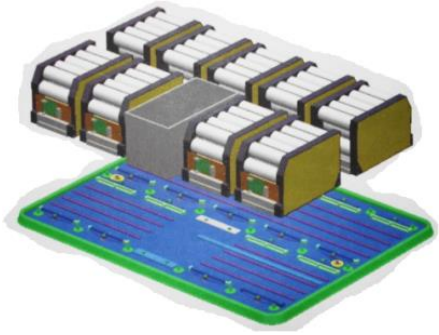

- Floor section covers total body stiffness
- Partition wall for roll-over protection
- Limited number of body parts:
  - 12 main body parts
  - 80 parts in total (ex. fixing materials, glues & sealers)

Pollux contribution

Development HMI system

- HMI displays with visual comfort
- Active Force Feedback Pedal
- New look & feel for EV driving
- Stimulation to drive safely and efficiently
- Energy saving

- Feasibility study (X by wire)

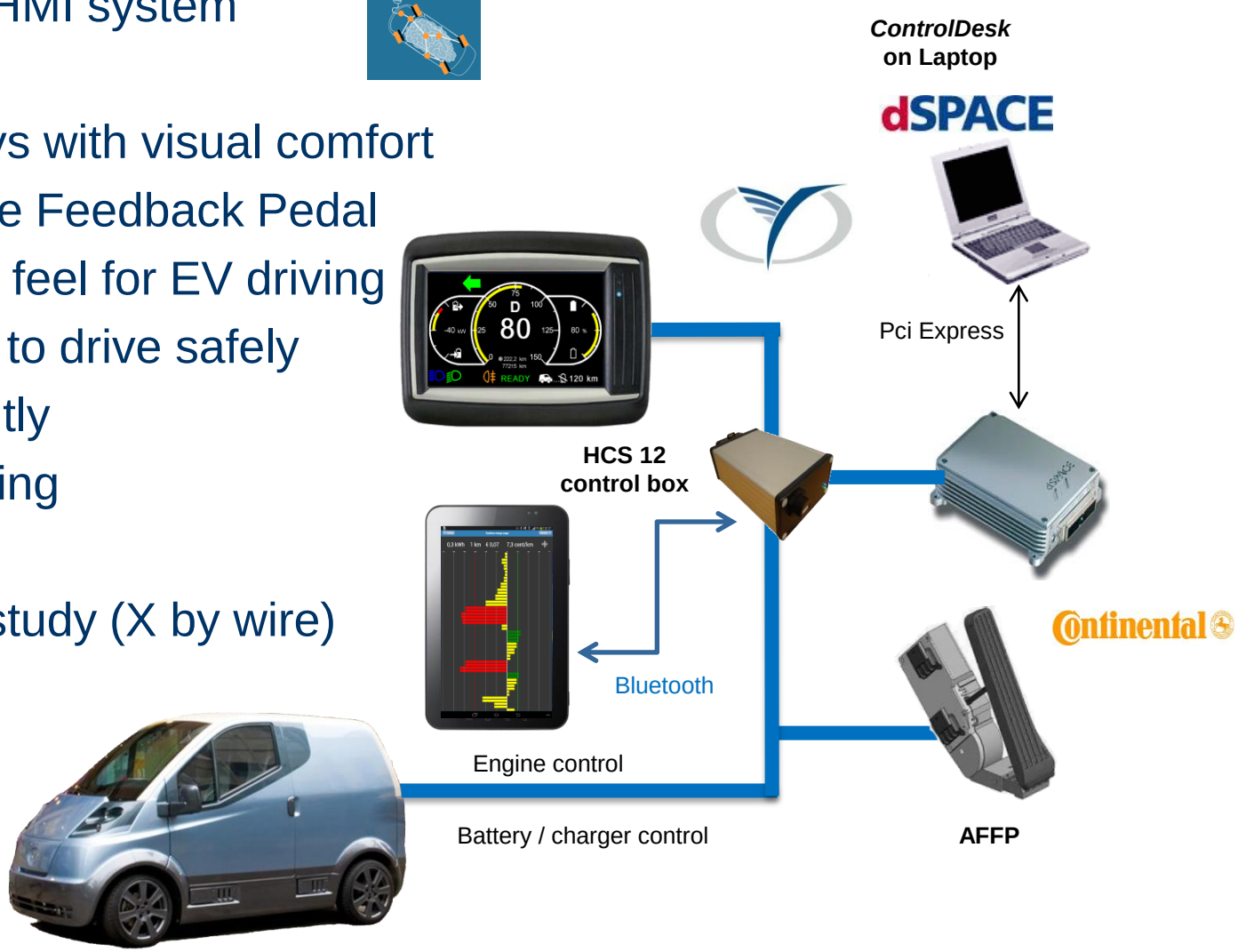

HMI Display's

- Primary Display
  - Limited symbols to minimize distraction
  - Comfortable lay-out
  - State of charge
  - Energy consumption
  - Remaining range

- Secondary Display
  - Energy & Costs
  - Real time
  - History / driver

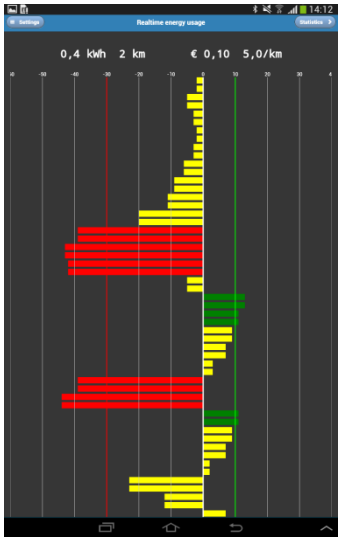

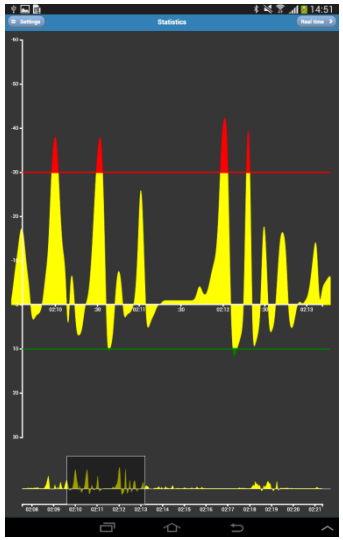

EV architecture NG

Chassis domain of QUICC NG

- Brake by wire
- Steer by wire
- Active body control
- Upgrade HMI
- Engineering partner

AWEFLEX systems

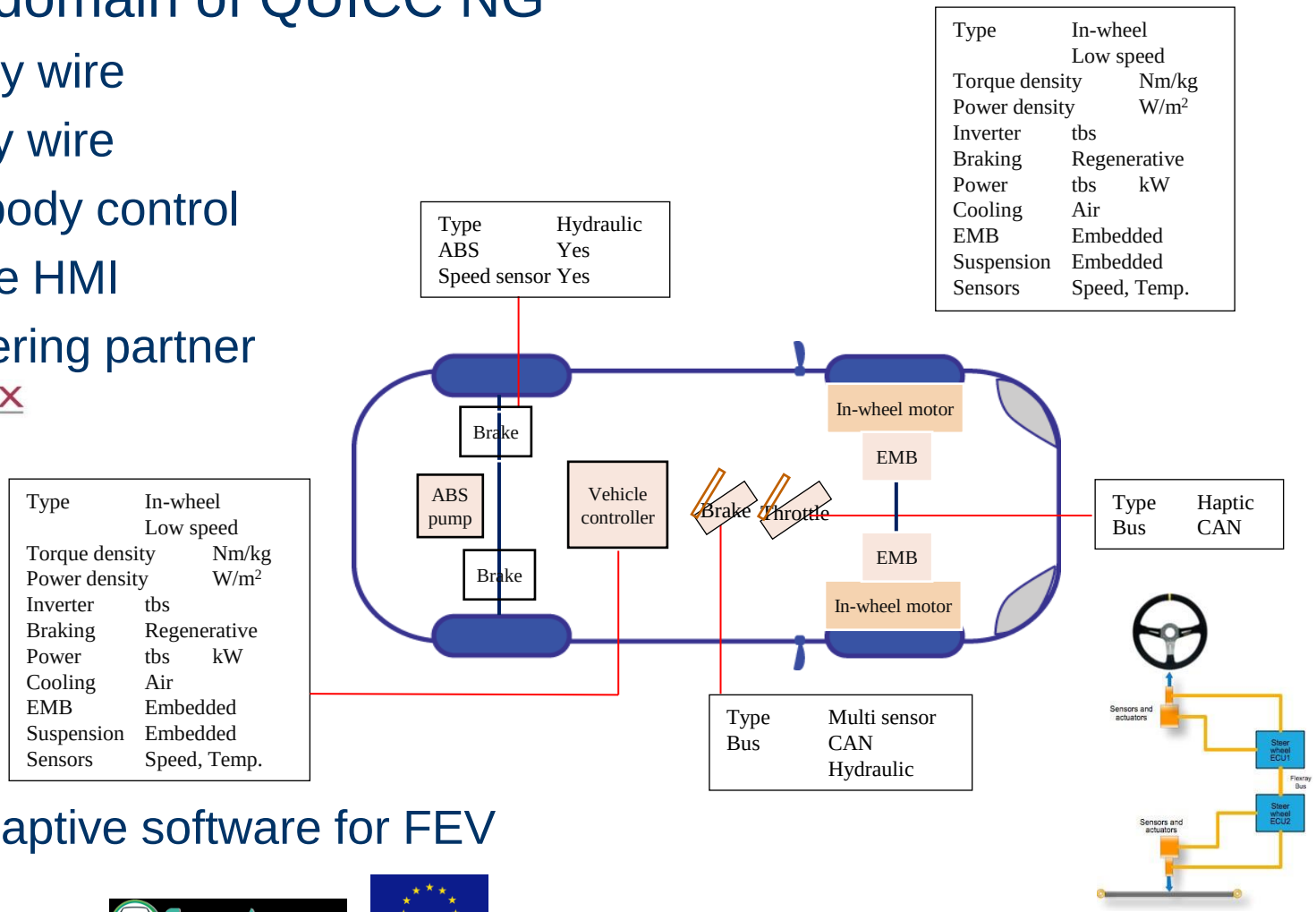

- Safe adaptive software for FEV

SafeAdapt

ARTEMIS

eniac JOINT UNDERTAKING

Summary

QUICC NG

- DuraCar will introduce a number of fully electrically powered vehicles
  (QUICC! DiVa is the first of the family)

- Emission free,
- Low cost in energy consumption and maintenance
- Easy to use in urban distribution
- Low cost assembly (dealer level)
- Reduce the numbers of components within the vehicle

Next phase:

- New Projects: **Safe Adaptive Software for Fully Electric Vehicles**
- Development QUICC NG
- Engineering partner (OEM's) for configuration of EV power trains of Heavy Duty vehicles such as:
  Trucks, Busses, Airport busses

Electric Mobility





"eMobility eMotion"

25-26th September 2013, Toulouse, France

Thank you for your attention

ARTEMIS

eniac JOINT UNDERTAKING