Electric Mobility

"eMotion in Smart Cities"

25-26th September 2012, University of Bologna, Italy

Automotive Ethernet, Holistic Approach for a Next-generation In-Vehicle Networking Standard

Peter Hank, System Architect
NXP Semiconductors, Germany

ARTEMIS

eniac JOINT UNDERTAKING

Presentation Outline

- Introduction – Connected Mobility
- In-Vehicle Networking – Three Snapshots
- Automotive Networking – A Vision for the Future
- Domain oriented architectures
- Automotive Ethernet
- First Solutions and Products
- Summary

Connected Mobility

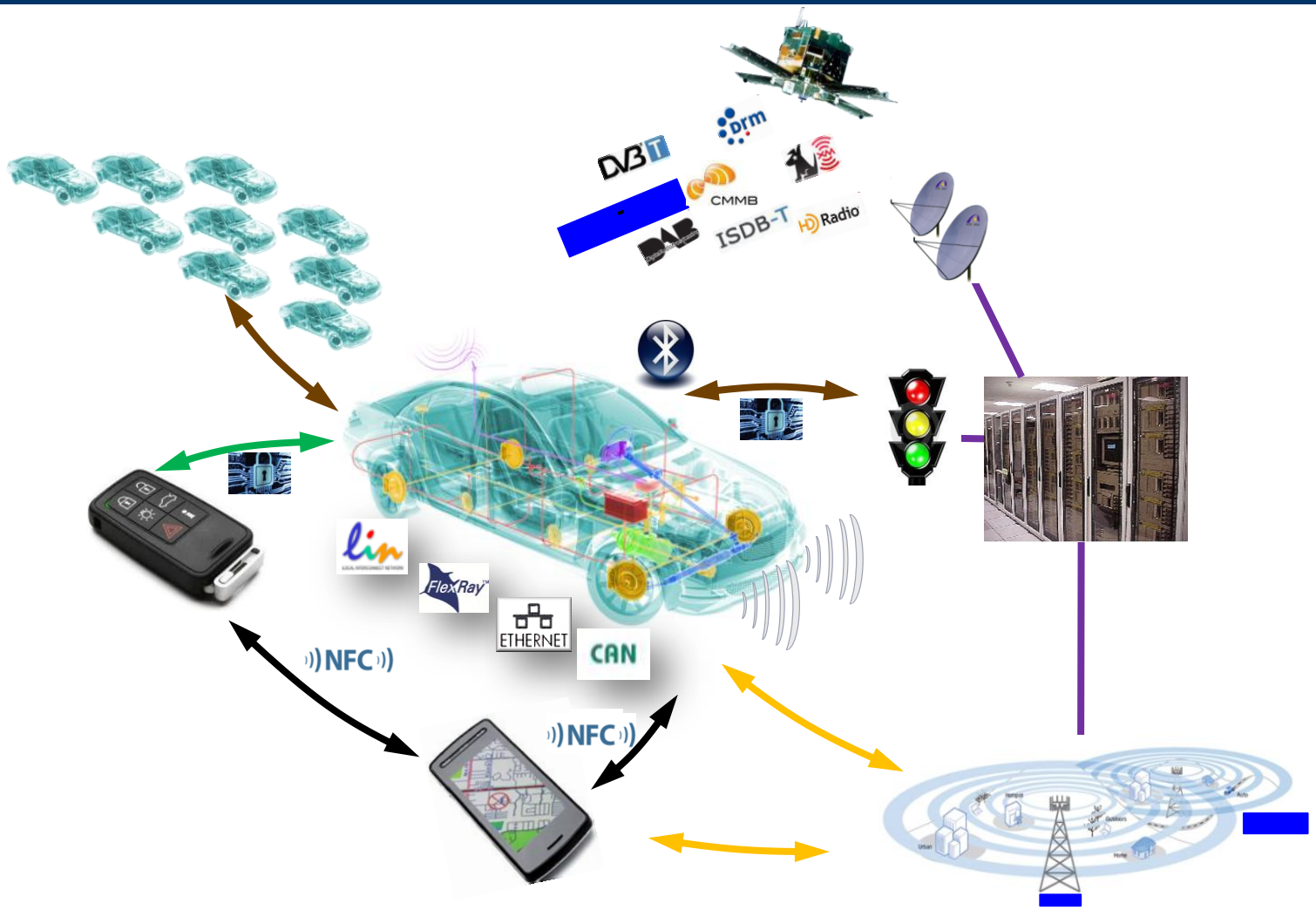

… enables communication between cars, people, infrastructure, inside the car

In Vehicle Networking-Three Snapshots

100Mbit/s

ETHERNET — Infotainment ADAS

10Mbit/s

FlexRay — Chassis

1Mbit/s

CAN — Power train

20kbit/

lin — Body

Differentiating in standards, driven by demand for comfort, safety, energy saving, infotainment

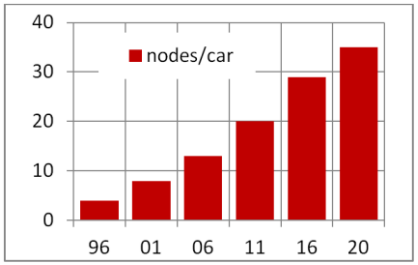

today

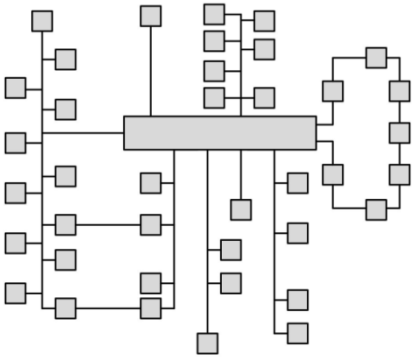

It's all about managing complexity function-wise, cost-wise, safety-wise

tomorrow ?

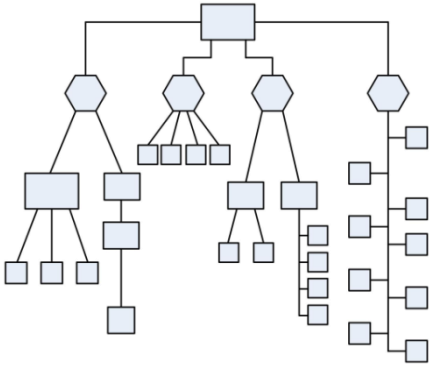

Daimler S-Class
>100 nodes

Different OEMs, different complexity, needs, solutions

Tata Nano
2 nodes

ARTEMIS

eniac JOINT UNDERTAKING

In-Vehicle Networking, a complex Beast

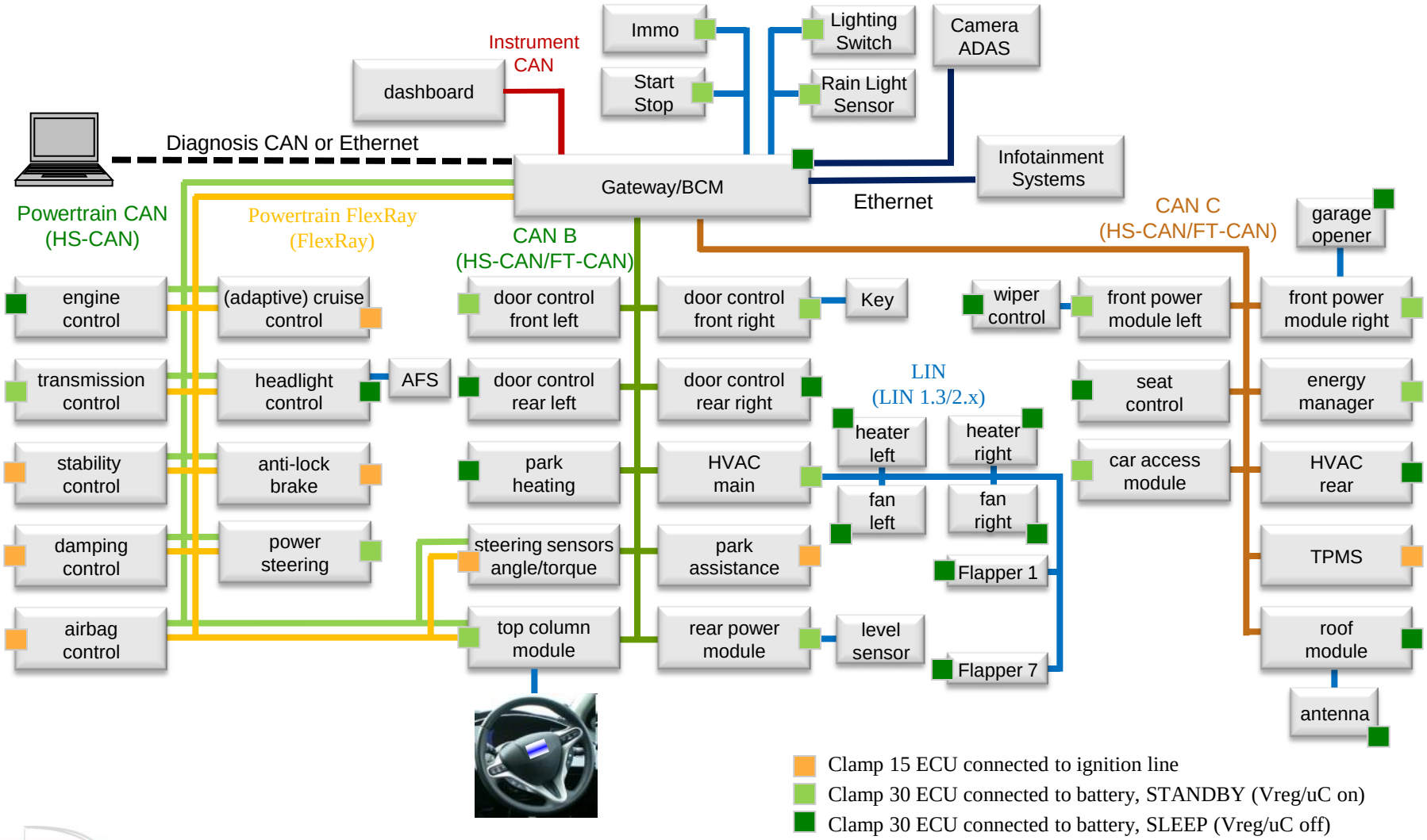

- Clamp 15 ECU connected to ignition line
- Clamp 30 ECU connected to battery, STANDBY (Vreg/uC on)
- Clamp 30 ECU connected to battery, SLEEP (Vreg/uC off)

ARTEMIS

eniac JOINT UNDERTAKING

Vision of IVN network architecture

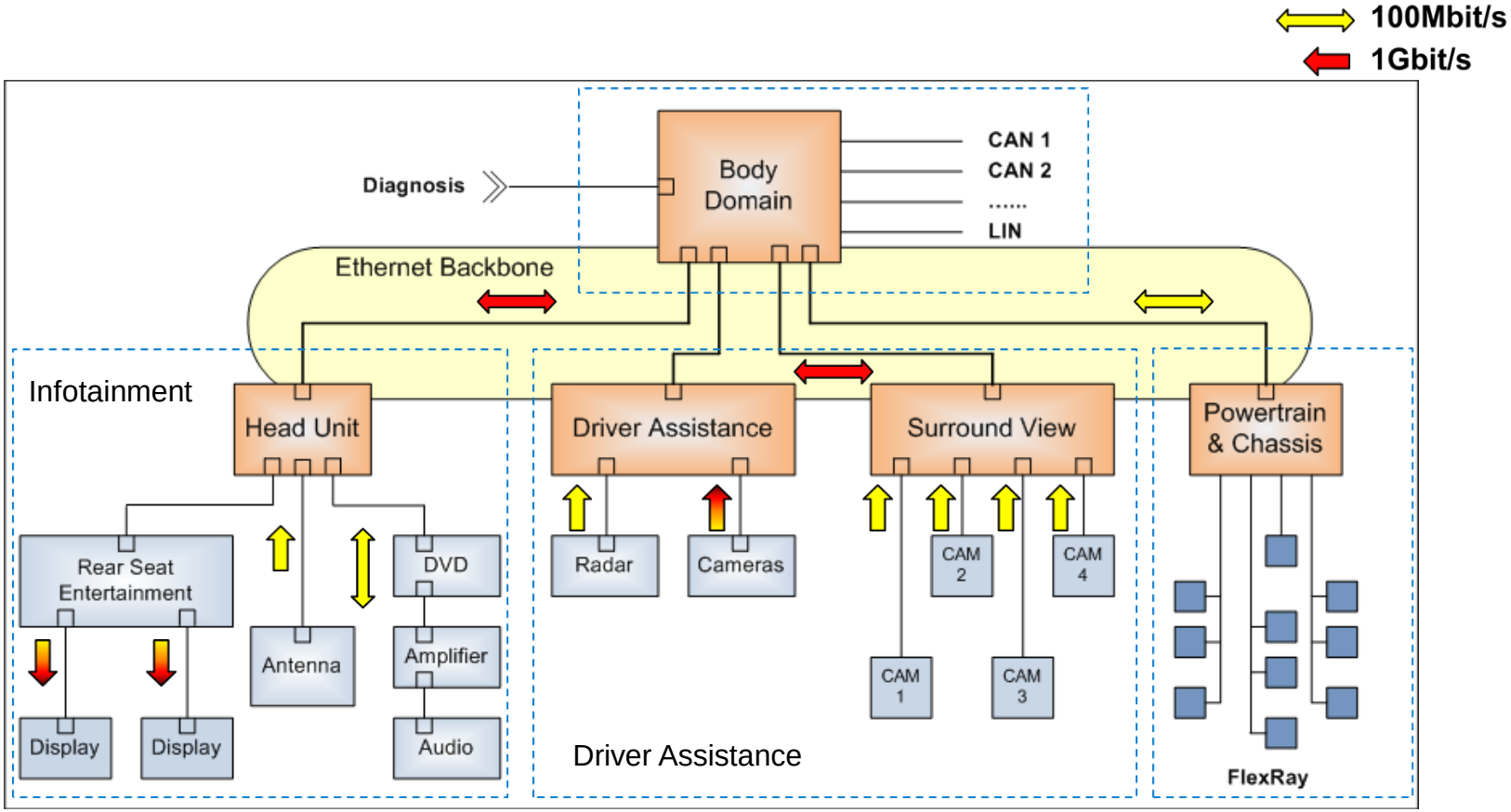

- High data rate; different data classes coexist on same network
- New standards will come, old will stay; cost remains the driver!
- Increasing robustness demands due to more electronics

Domain Architecture

- Communication and bandwidth requirements increase more and more with more complex car applications, e.g. enhanced safety, driver assistance, entertainment
- Car networks like LIN, CAN, FlexRay are not specified to cover increasing demands for bandwidth and scalability
- Network solutions for higher bandwidth are available but expensive
- End users expect in the car same level of data availability as at home
- Future networking technology shall re-use as much as possible from non-automotive while taking automotive-specific requirements into account

Why Automotive Ethernet ?

- Ethernet is good for backbone bus systems connecting domains and sub-networks that require higher bandwidth
- Switched Ethernet networks rely on point-to-point comm. and bandwidth is more efficiently used than in broadcast systems (CAN, FlexRay)
- Ethernet is a paradigm shift in next-generation car networks to:
  - Connect different application domain networks
  - Transport different kinds of data (control data, streaming, etc.)
  - Fulfil stringent robustness demands (Temp, EMC) across network protocols

Relationship to ISO Reference Model

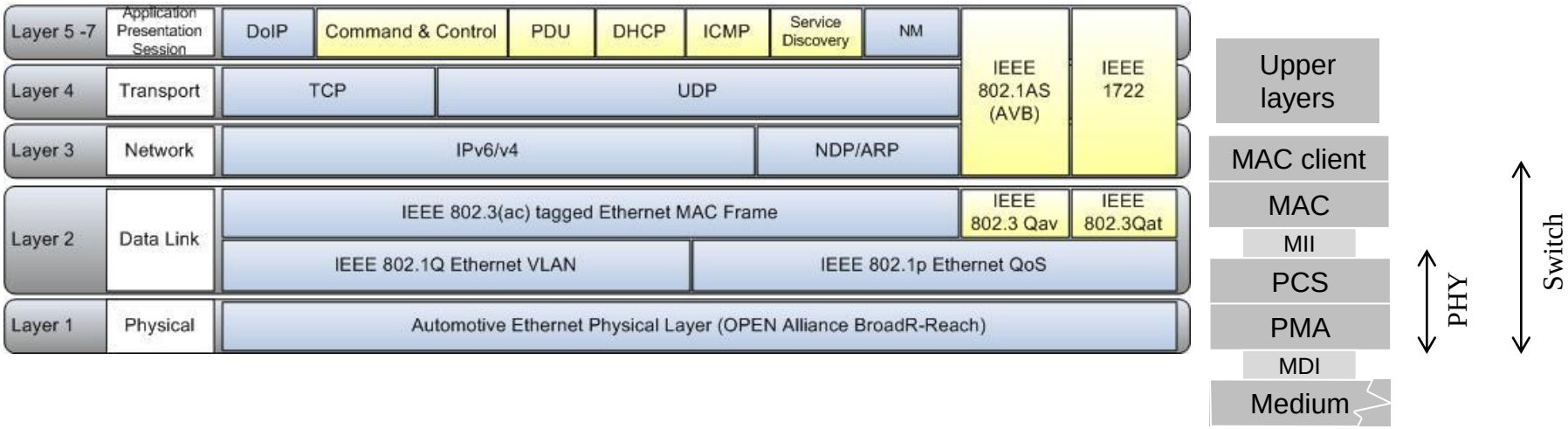

AVB	Audio Video Bridging
ARP	Address Resolution Protocol
Bonjour	Method to discover services
DHCP	Dynamic Host Configuration Protocol
DoIP	Diagnosis over IP
ICMP	Internet Control Message Protocol
NDP	Neighbour Discovery Protocol
MII	Media-independent interface
MDI	Medium-dependent interface
PCS	Physical coding sublayer
PMA	Physical medium attachment
PTP	Precision Time Protocol
SOME/IP	Middleware
TCP	Transmission Control Protocol
UDP	User Datagram Protocol
VLAN	Virtual LAN

AVB (Audio Video Bridging) Ethernet

… provides QoS and synchronous communication needed for Audio/Video streaming and advanced driver assistance applications

- IEEE 802.1AS – Timing and Synchronisation
- IEEE 802.1Qat – Stream Reservation
- IEEE 802.1Qav – Queuing and Forwarding

Ethernet Physical Layer Standards

MII: Medium Independent Interface
GMII: Gigabit Medium Independent Interface
PAM: Pulse Amplitude Modulation
PMD: Physical Medium Dependent
NRZI: Non Return to Zero Inverted

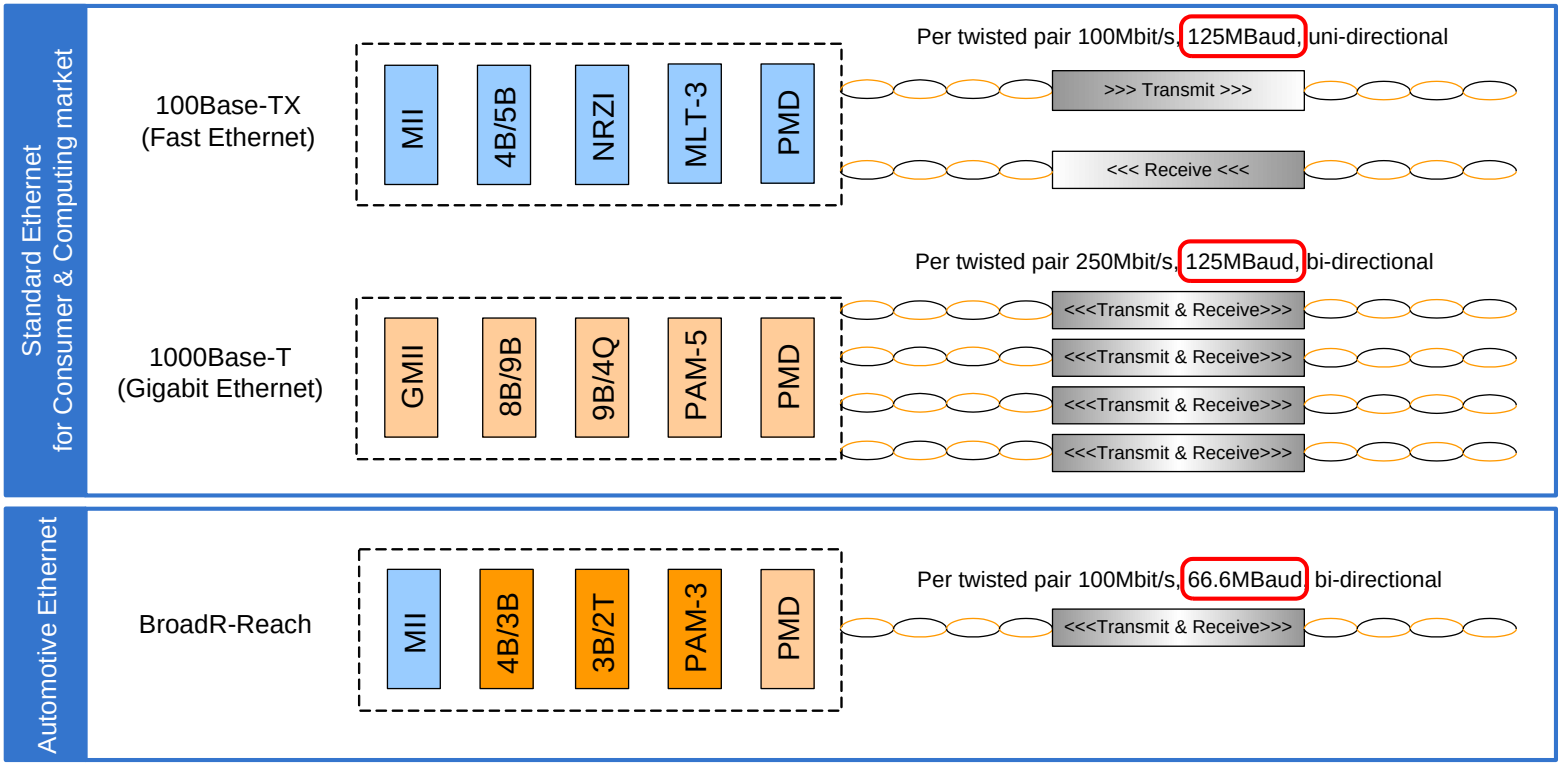

Conclusion: BroadR-Reach Technology most promising for 1st generation automotive applications
Due to the standardized MII interface, the PHY technology can be exchanged.

BroadR-Reach vs. 100Base-TX

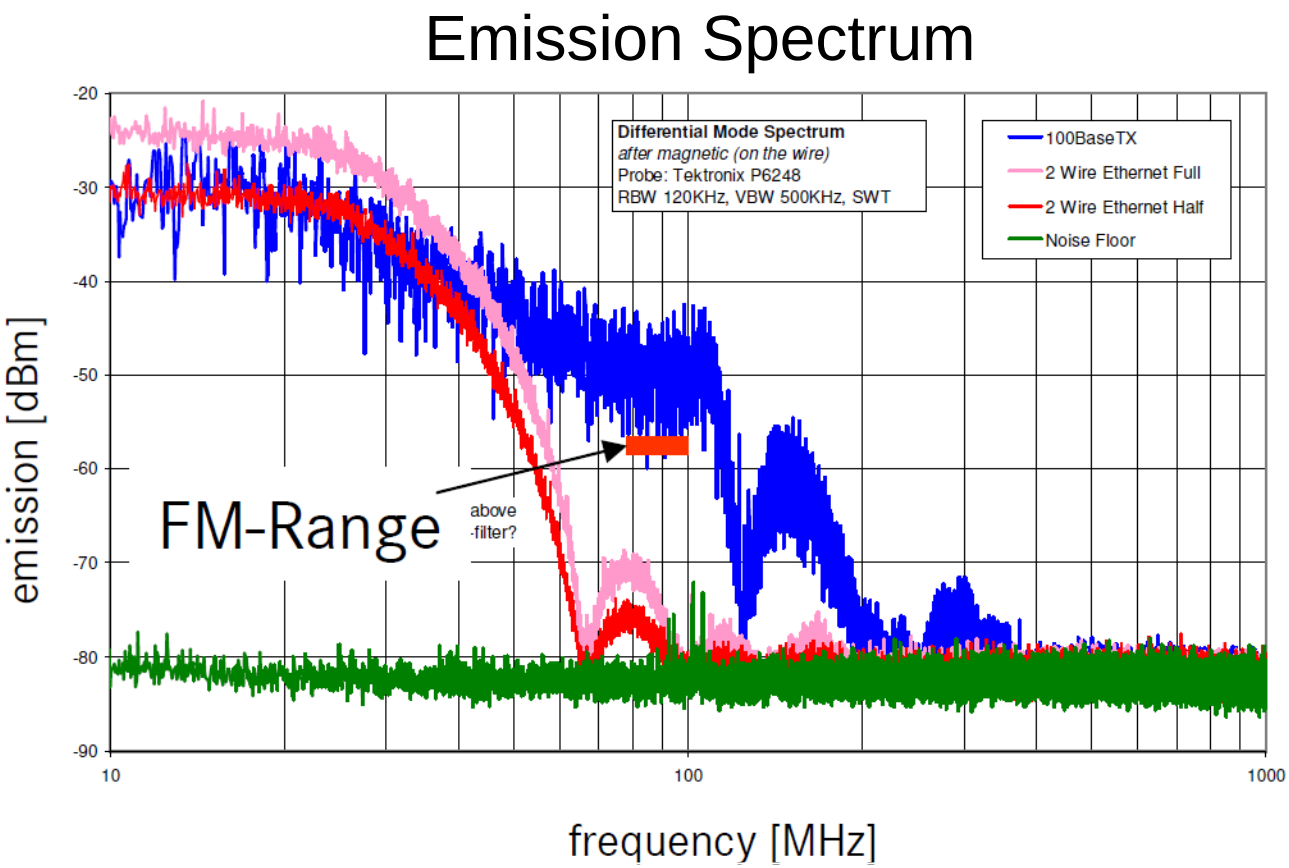

- Fast Ethernet (100Base-TX) spectrum interferes with radio FM-range
- Bandwidth of BroadR-Reach can be reduced due to coding scheme

First Automotive Ethernet Products

Enhanced low power management incl.

- Energy Efficient Ethernet support with Low Power Idle mode
- Lowest power consumption in Low Power Sleep mode
- Robust remote wakeup via Ethernet wires
- INH switch to control ECU supply

Automotive Grade EMC/ESD

- MDI pins protected against:
  - ± 6kV ESD (HBM, IEC61000-4-2)
  - Transient Pulses (ISO7637)
- Enhanced integrated PAM-3 pulse shaping for low RF emission
- EMC optimized output driver strength for MII/RMII

Automotive PHY component

- Temperature range -40 …+125°C
- Small HVQFN-36 package
- On-chip 1.8V LDO regulator for single 3.3V supply operation
- MII as well as RMII
- Transmitter optimized for capacitive coupling to UTP cable of up to 25m length

Diagnosis – Fail Safe Behaviour

- Diagnosis of cabling errors (shorts and opens)
- Gap-free supply under-voltage detection with fail-silent behaviour
- Internal, external and remote loopback mode for diagnosis
- Dedicated EN pin to disable PHY in case of emergency shutdown

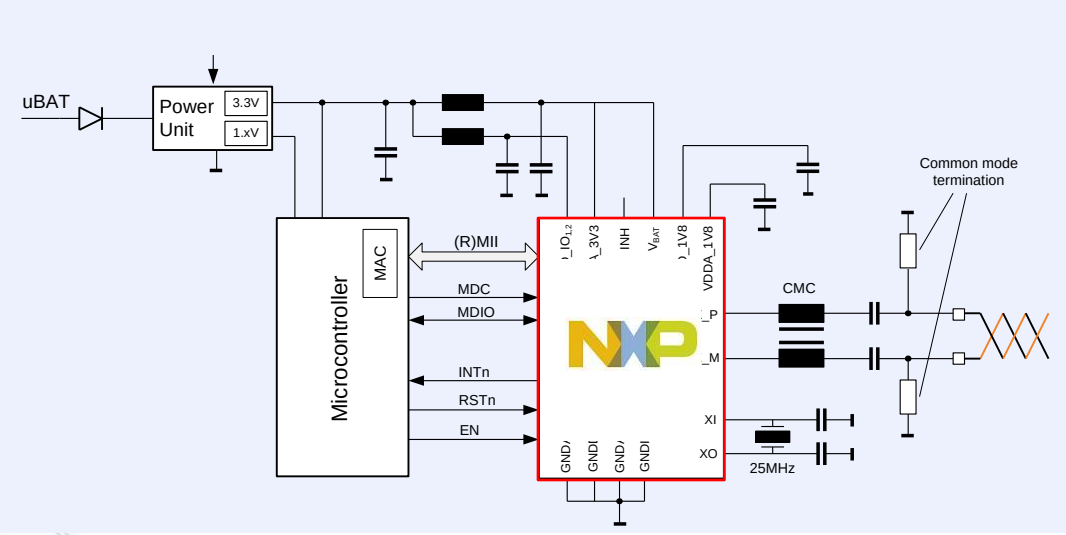

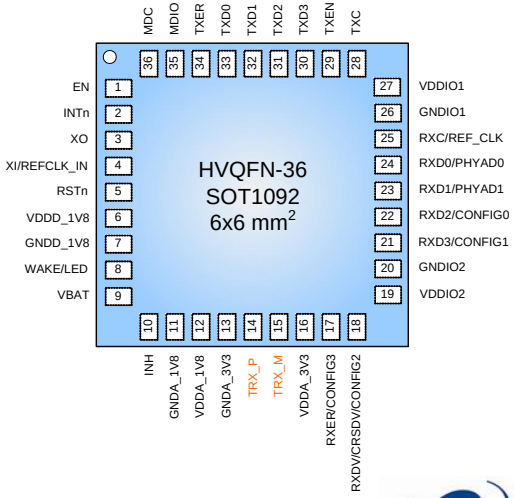

Summary

- Increasing bandwidth needed for driver assistance and infotainment
- Network topologies will change from decentralised domain-specific architectures to hierarchical architectures
- Ethernet provides scalability and flexibility for next-generation networks
- New automotive optimised components required
- Promising steps taken with BroadR-Reach technology
- IEEE work has been started for RTPGE (Reduced Twisted Pair Gigabit Ethernet)
- Further studies needed to validate the secure coexistence of different Data Com classes on the same network

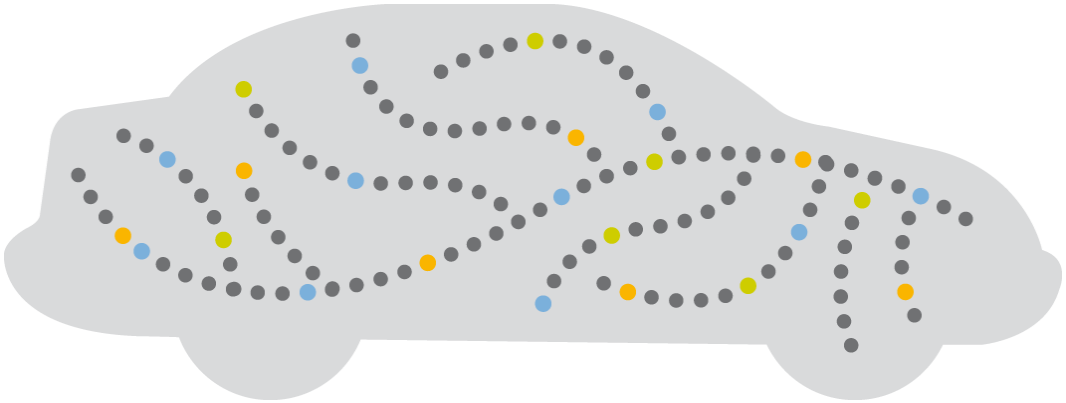

Thank you for your attention